www.new-nb.com

G40 Monitor Desk Stand

Screen Size	Capacity	VESA	Upright	Rotation	Tilt angles	Swivel angles
22"–40"	4.4 – 33 lbs (2–15 kg)	75×75–100×100mm	12.6" (320mm)	360°	+85° / –30°	± 90°

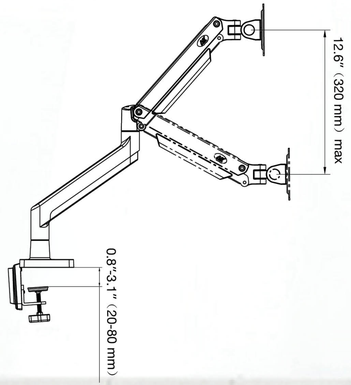

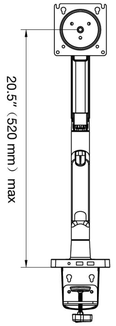

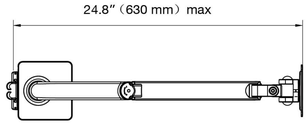

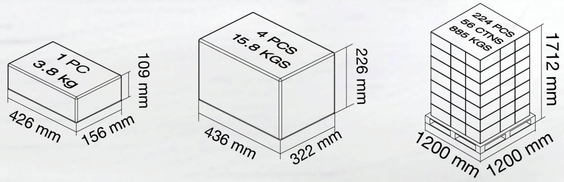

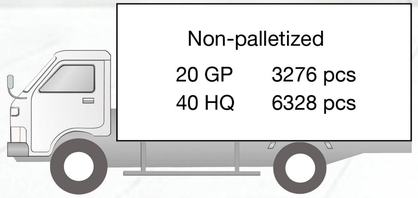

Non-palletized

20 GP	3276 pcs
40 HQ	6328 pcs